# SERIES 1000 STAINLESS STEEL

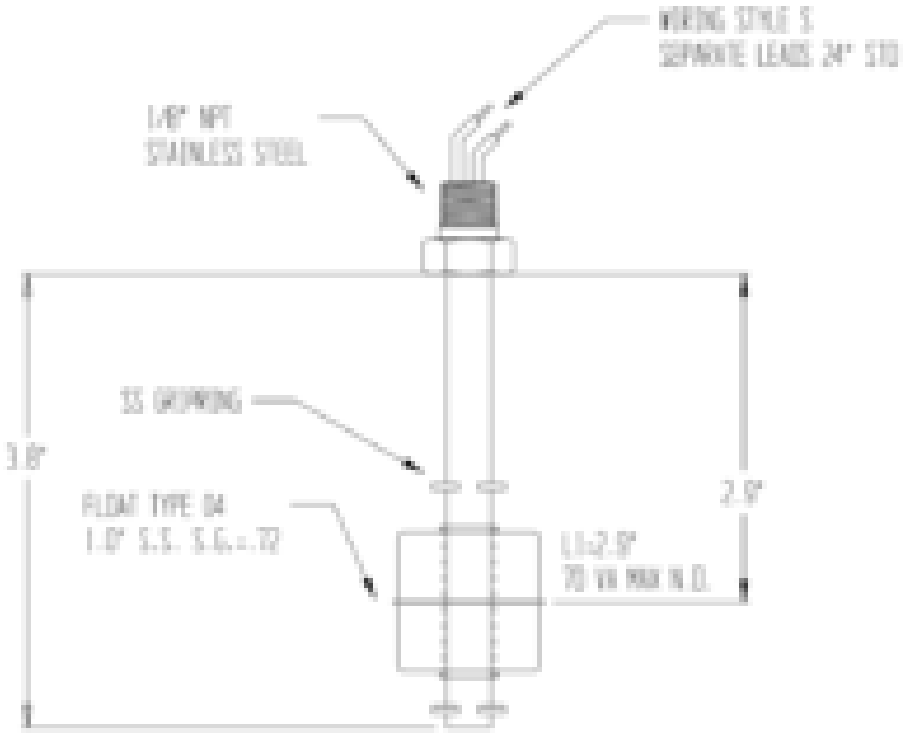


NOTES:

| CUSTOMER OF APPROVAL | DATE |
|---|---|
| PRINT: | |
| CODE: | |

INNOVATIVE COMPONENTS

TITLE: SERIES 1000 STAINLESS STEEL

PART: 11-1-5411

FINISH: SILVER

DRAWN: J. CHAMPIONNAIS